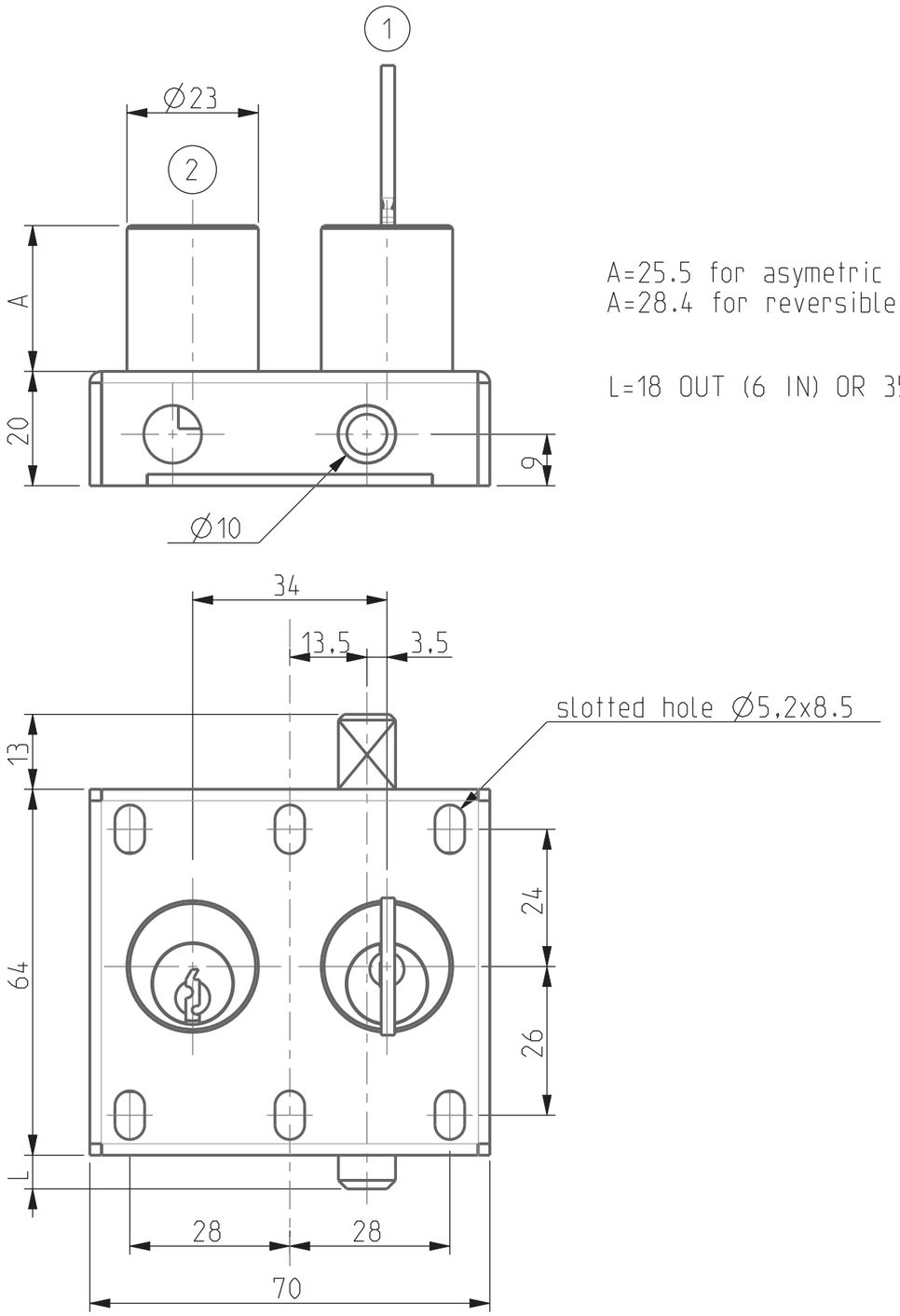

A=25.5 for asymetric key
A=28.4 for reversible key

L=18 OUT (6 IN) OR 35 OUT (23 IN)

Initial Position
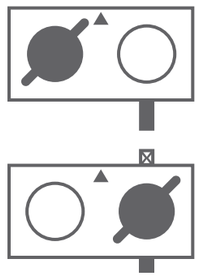
Final Position