DOM 225081



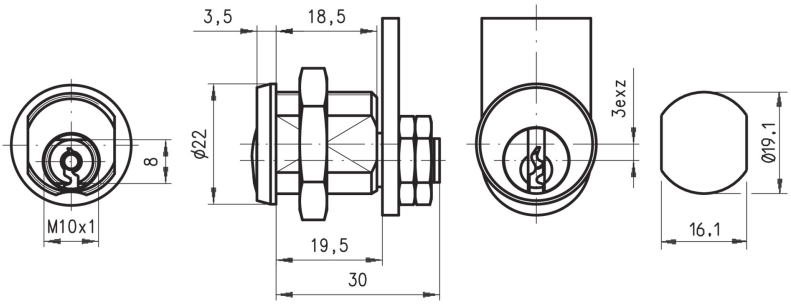

SECURITY TYPE

Conventional Pin System

AVAILABLE LOCKS FIXINGS

Lock Fixing ID	Lock Fixing
L2	Nuts

AVAILABLE KEY SERIES

Key Series	Combinations	MK Possible
22	1500	Yes
2C	2600	No

AVAILABLE ROTATIONS

Direction ID	Degrees	Direction	Key Extraction
D02	90	Right Opening - Left Closing	1
D03	90	Left Opening - Right Closing	1

TECHNICAL FEATURES

Standard Finish	Bright Nickel
Number of Keys	2
Standard Cam Family	225
Body Length	19.50

APPLICATIONS OF USE

Wood Furniture, Metal Furniture, Letter Boxes, Hygiene, Electrical Equipment, Retail, Storage

DOM 225081

ORDER INFORMATION

Type	Direction ID	Lock Fixing	Panel Thickness	Cam Fixing	Cam Family	Key Series	Product Code	DOM Germany Cross Reference
225-08-1	D02	Nuts	15.0	Nuts	225	2C	225-08-1-D02-L2-C2-2C	225KON203994
225-08-1	D02	Nuts	15.0	Nuts	225	22	225-08-1-D02-L2-C2-22	225KON203994
225-08-2	D03	Nuts	15.0	Nuts	225	2C	225-08-2-D03-L2-C2-2C	225KON203995
225-08-2	D03	Nuts	15.0	Nuts	225	22	225-08-2-D03-L2-C2-22	225KON203995